1859357
Antique Mahogany Bookcase

Parts and Hardware List

A.	Top Panel	1 pc
B.	Top Frame	1 pc
C.	Sides	2 pcs
D.	Bottom	1 pc
E.	Adjustable Shelves	2 pcs
F.	Fixed Shelf	1 pc
G.	Wood Screws	4 pcs
H.	Confirmat Screws	8 pcs
I.	Allen Head Bolts	4 pcs
J.	Lock Washers	4 pcs
K.	Flat Washers	4 pcs
L.	Allen Wrench	1 pc
M.	Shelf Supports	8 pcs
N.	Phillip Head Screwdriver	1 pc

∗ Please make sure that you have all the parts and hardware indicated above before you begin assembly of this item.
∗ Use the hardware illustrations to determine correct piece and size.
∗ This item should be assembled on a soft surface to prevent scratching the finish during assembly.
∗ This item may require periodic tightening.

1859357
Antique Mahogany Bookcase

Hardware Illustrations

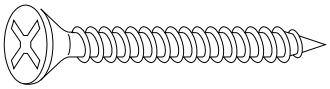

G. Wood Screws

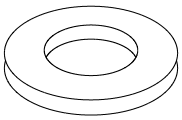

K. Flat Washer

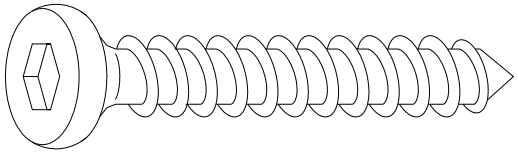

H. Confirmat Screw

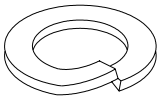

J. Lock Washer

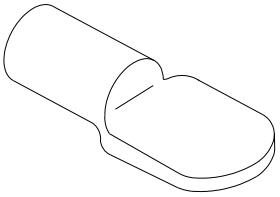

M. Shelf Support

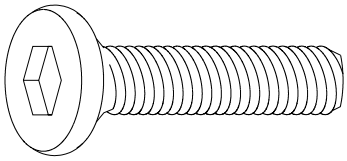

I. Allen Head Bolt

1859357
Antique Mahogany Bookcase

Attach Side with Top and Bottom

Parts required

B.	Top Frame	1 pc	I.	Allen Bolts	4 pcs
C.	Sides	2 pcs	J.	Lock Washers	4 pcs
D.	Bottom	1 pc	K.	Flat Washers	4 pcs
F.	Fixed Shelf	1 pc	L.	Allen Wrench	1 pc
H.	Confirmat Screws	8 pcs			

1. **Attach Sides (C).** Align the pre-drilled holes in the corner of the Top Frame (B) and Bottom (D) with pre-drilled holes in the ends of the Sides (C). Drill the Confirmat Screws (H) throught the Top Frame (B) and Bottom (D) into the ends of the Sides (C) by using Allen Wrench (L). See illustration #1
2. **Attach Fixed Shelf (F) with Sides (C).** Place the Fixed Shelf (F) between the middle of the Sides (C). Align the pre-drilled holes in the wood block on the back of the Fixed Shelf (F) with pre-threaded holes in the Sides (C). Secure with Allen Head Bolts (I), Lock Washers (J), Flat Washers (K) by using Allen Wrench (L). See Illustration #1

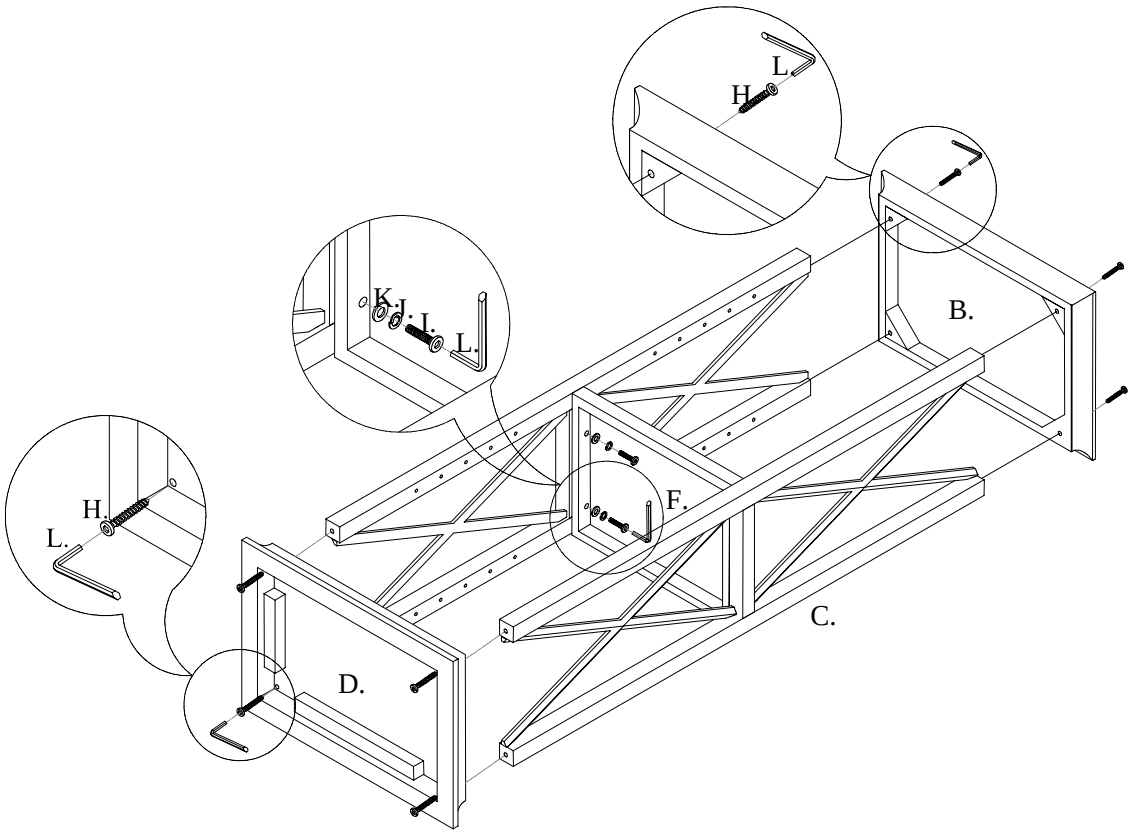

Illustration #1

1859357
Antique Mahogany Bookcase

Attach Shelves and Top Frame

Parts required

A.	Top Panel	1 pc	G.	Wood Screws	4 pcs
B.	Top Frame	1 pc	N.	Phillip Head Screwdriver	1 pc

3. **Attach Top Panel (A) with Top Frame (B).** Turn the bookcase up. Set the Top Panel (A) into the frame of the Top Frame (B). Drill the Wood Screws (G) throught the wood block into Top Panel (A) by using Phillip Head Screwdriver (N). See illustration #2

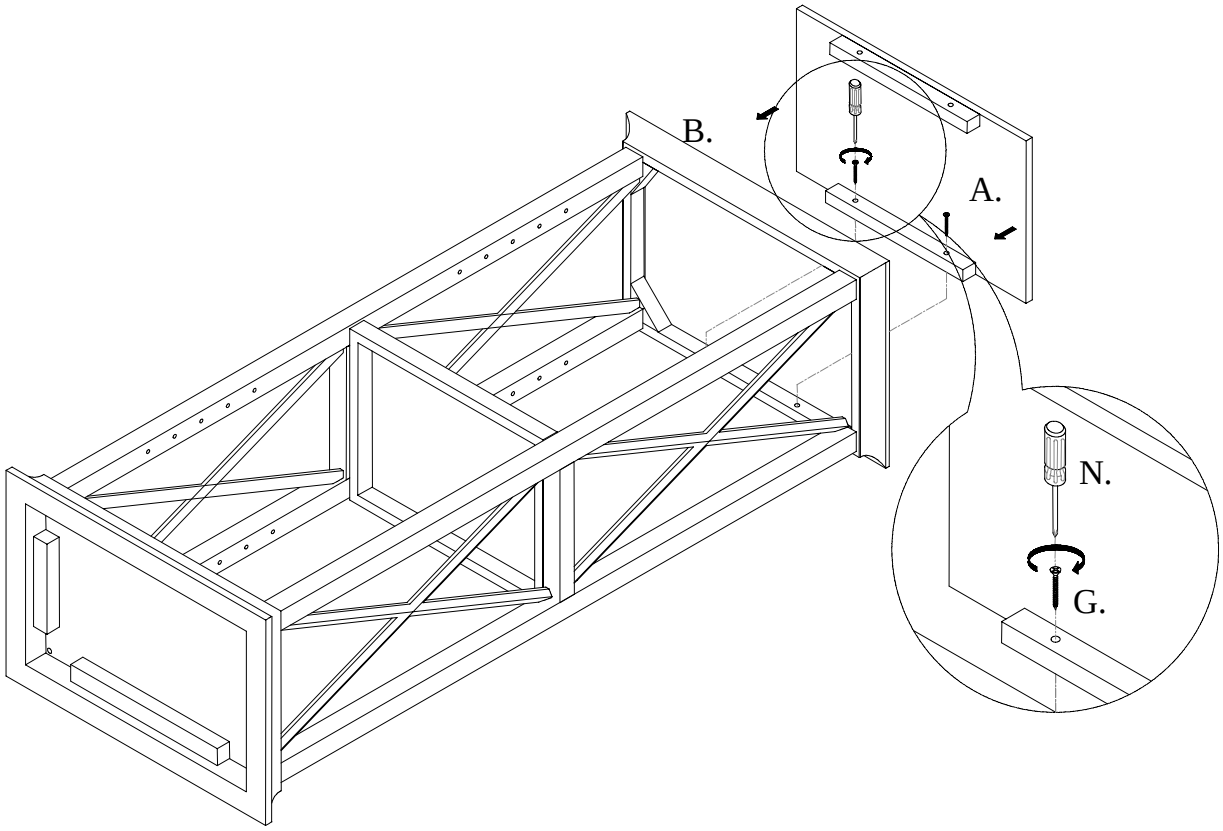

Illustration #2

1859357
Antique Mahogany Bookcase

Attach Shelves and Top Frame

Parts required

E.	Adjustable Shelves	2 pcs	M.	Shelf Supports	8 pcs

4. **Attach Adjustable Shelves (E).** Insert the Shelf Supports (M) into the desired holes in the Sides (C). Place the Adjustable Shelves (E) on the Shelf Supports (M).

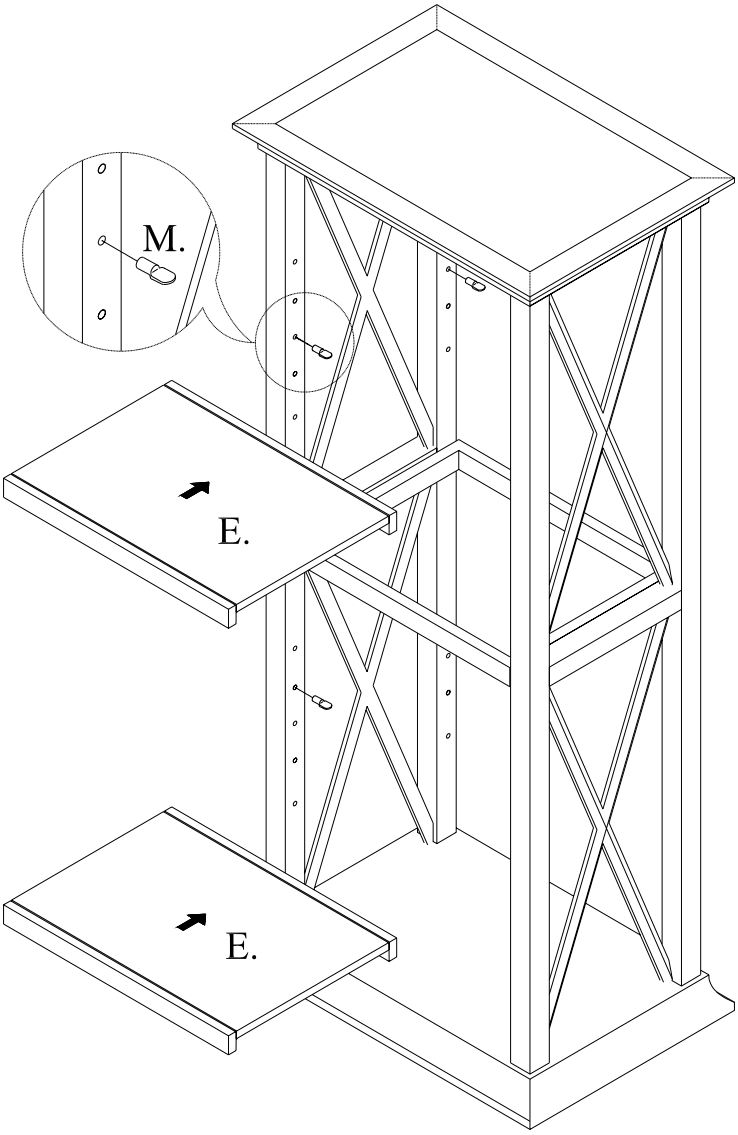

Illustration #3